THIS DRAWING IS UNPUBLISHED. RELEASED FOR PUBLICATION 24-4-01
© COPYRIGHT 2001 BY TYCO ELECTRONICS CORPORATION, ALL RIGHTS RESERVED.

LOC	DIST
E	B

REVISIONS

P	LTR	DESCRIPTION	DATE	DWN	APVD
	1	FIRST ISSUE	02MAY2001	DRT	MJW
	3	EB00-0159-01	09MAY2001	EAS	MJW
	A	EB00-0182-02	24JUNE2002	MJG	BB
	B	EBA0-0049-04	25AUG2004	MJG	BB

SUGGESTED MATING TAB

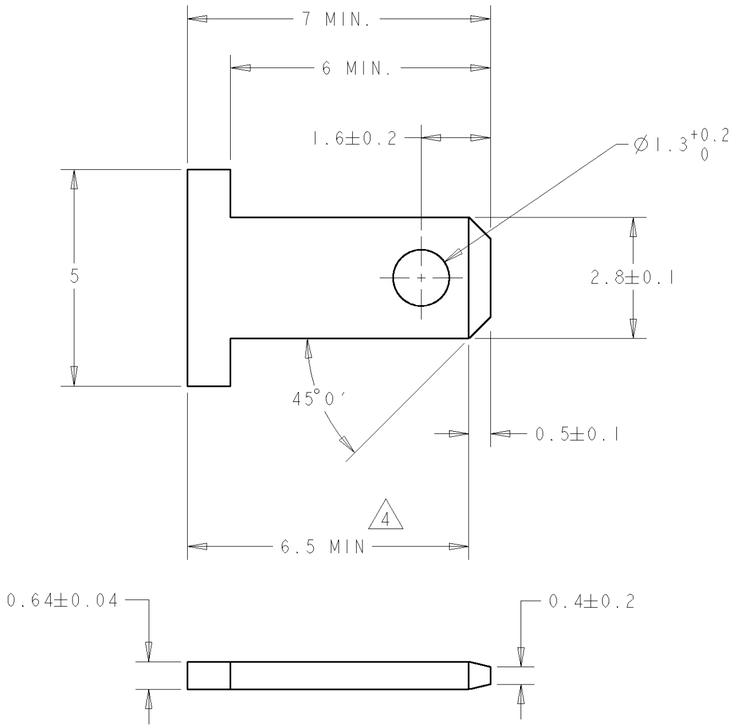

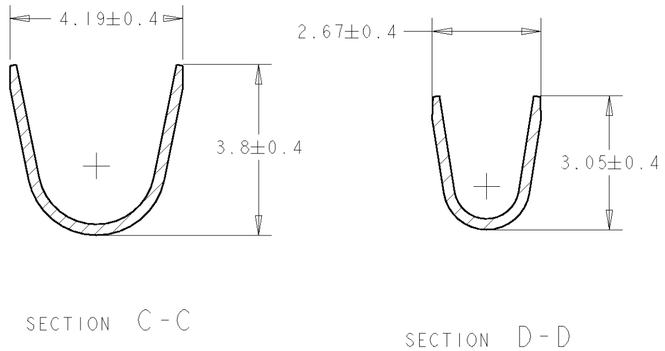

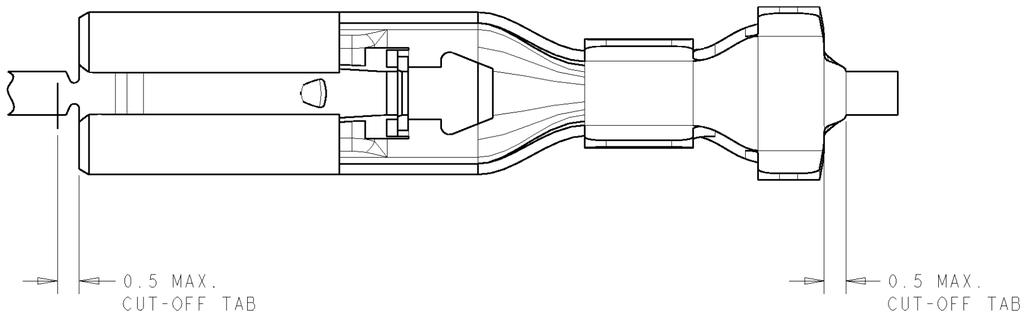

1. MATERIAL :- #2 HARD BRASS OR NICKEL PLATED STEEL
2. NO BURRS PERMISSABLE AT HOLE
3. TIN PLATED IS REQUIRED ON BRASS WHEN TERMINAL TEMPERATURE IS OVER 85 DEG C

4 MUST BE FLAT WITHIN 0.076 OVER THIS LENGTH

5. MUST BE SYMETRICAL ABOUT TAB WITHIN 0.076

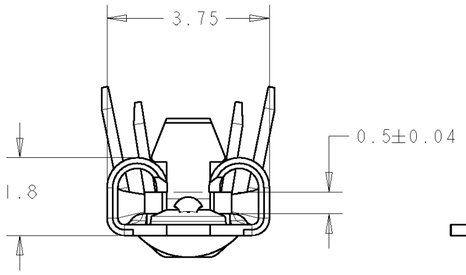

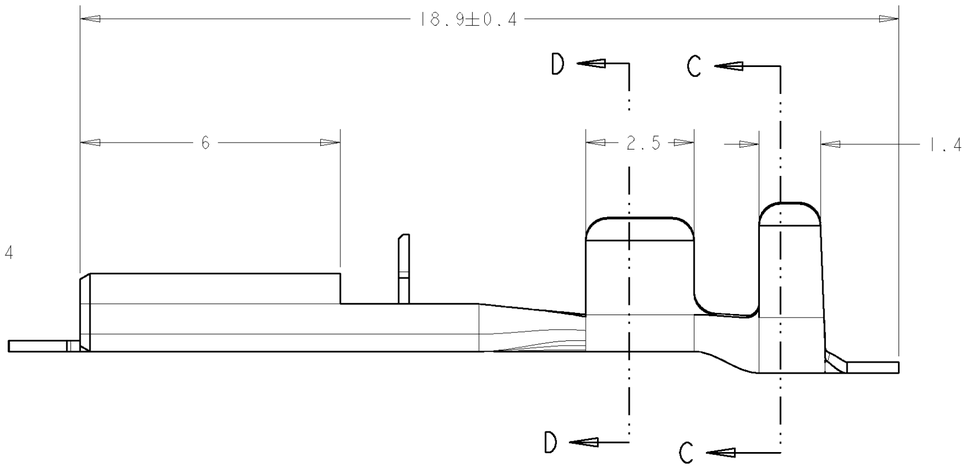

		1337984-1
		PART NUMBER

THIS DRAWING IS A CONTROLLED DOCUMENT FOR TYCO ELECTRONICS CORPORATION. IT IS SUBJECT TO CHANGE AND THE CONTROLLING ENGINEERING ORGANIZATION SHOULD BE CONTACTED FOR THE LATEST REVISION.

DIMENSIONS: mm

TOLERANCES UNLESS OTHERWISE SPECIFIED:
LINEAR ±0.5
~~0 PLC ±0.1~~
~~1 PLC ±0.1~~
~~2 PLC ±0.05~~
~~3 PLC ±~~
~~4 PLC ±~~
ANGLES ±0.5

MATERIAL BRASS
FINISH TIN

DWN	D.R.TERRY 24APR2001
CHK	E SCOTT 01MAY2001
APVD	M WHELAN 02MAY2001
PRODUCT SPEC	108-3444
APPLICATION SPEC	114-5120
WEIGHT	-

AMP Tyco Electronics UK Ltd, Stanmore, Middlesex, HA7 4RS.

NAME: 110 SERIES POSITIVE LOCK REC. CONTACT -

SIZE	CAGE CODE	DRAWING NO	RESTRICTED TO
A2	00779	C-1337984	-

CUSTOMER DRAWING | SCALE 10:1 | SHEET 1 OF 1 | REV B