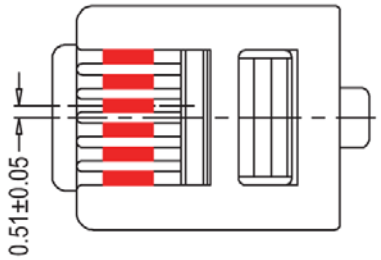

MP6P6C R

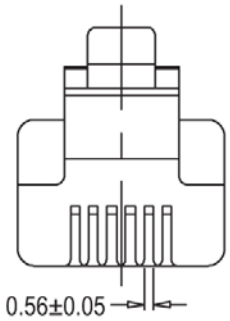

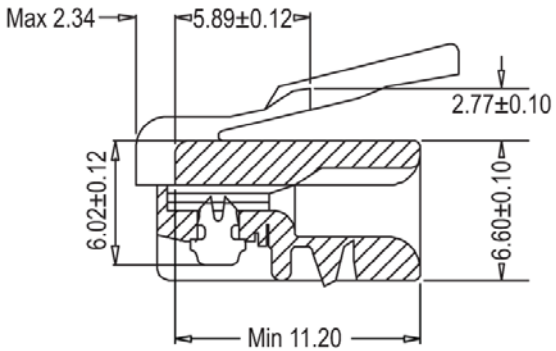

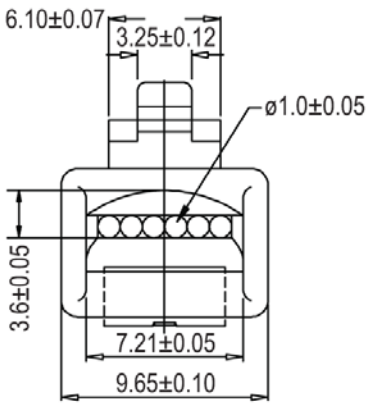

Material:

- Housing: Polycarbonate UL94V2
- Contact Blade: High Strength Copper Alloy
- 100 Micron Nickel underplated
- Plating type: 8% Phosphor Bronze
- Plating Thickness: 6μ" Gold plated
- Operating Temperature: -40°C ~ 125°C

Electrical:

- Current Rating: 250V AC / Max @2.0A
- Dielectric: 500V AC
- Insulation Resistance: 500MΩ

Complies with FCC68/F

Unit: MM

RoHS Complaint

Scale	1:1						Name	Item No. **A-MO-6/6-SR**
TOLERANCE					Drawn	12.19.11	Chappell	
X.X	±0.40				Approved			Title: Modular Cable Plug - 6P6C, Round cable, Unshielded
X.XX	±0.25							
X.XXX	±0.15							Drawing No. **rev00**
Angle	±3°							
			Modification	Date	Name			Replace / Sheet

ASSMANN WSW components